Krishna Kanta Handiqui State Open University

Tender Document for
Procurement of Office Furniture

Tender enquiry No. KKHSOU/Furniture/29/2009/212 Dated: 29-09-2026

Krishna Kanta Handiqui State Open University
H.O. Patgaon Rani Gate, Guwahati-781017
City Office: Resham Nagar, Khanapara, Guwahati-781022
Tel. 0361-2235971 Email. info@kkhsou.in

NOTICE INVITING TENDER

Annexure-I

Date: 29-09-2026

Sub: Notice Inviting Tenders for procurement of furniture.

Krisha Kanta Handiqui State Open University, Guwahati invites sealed Tenders from reputed Manufacturers/ Authorized Dealers /Bidders for procurement of above mentioned item.

All interested vendors are requested to send their sealed quotation for supply of the above item as per details technical specification given in **Annexure-VII**. The general terms and conditions and other details for bidders are at Annexure- **I to VIII.**

Details of tender are as follows;

Tender Reference No.	KKHSOU/Furniture/29/2009/……
Last Date and Time for receipt of Tender	27-10-2026 on or before 01:00 PM
Time and Date for Opening of Bid	27-10-2026 on 03:00 PM
Tender Fee (non refundable)	Rs. 1,000/-
EMD (refundable but non-interest bearing)	(EMD will be required after selection)
Contact Telephone Numbers	0361- 2235971, 2235642
For technical Details Contact through E-mail	info@kkhsou.in

The Tender document and details of terms and conditions can be downloaded from our website www.kkhsou.in

The bid proposals are to be sent in **three separate** sealed envelopes **(i) Technical Bid (ii)Financial/Price Bid (ii) Tender Fee kept in one sealed envelope duly super-scribed with Tender Reference No. and Tender Notice detail as appended hereunder**:

TENDER FOR SUPPLY OF FURNITURES
TENDER REF.
NO_____DATE:_____

LAST DATE FOR SUBMISSION:_____

To,
The Registrar
K. K. Handiqui State Open University
Resham Nagar, Khanapara,
Guwahati - 781022

From: M/s ----------
Contact No: ----------
E-mail ID: ----------

Annexure II

General Terms and Condition:

1. Krishna Kanta Handiqui State Open University, Guwahati hereinafter is referred as "BUYER" and Tenderer is referred as "BIDDER", hereby invites tenders from suppliers confirming specifications of tender documents.

2. Any new taxes and duties liable on the subject contract due to change in legislation during the contract period shall be reimbursed subject to the applicability of the said Act to the satisfaction of the buyer and the production of documentary evidence after availing of statutory concession, benefits etc.

3. The supplier shall pay and bear all other liabilities, taxes and duties not specifically agreed by the Buyer in the contract.

4. **The bids submitted without Tender Fee will be summarily rejected** and no further communications in this regard will be entertained. The university reserves the right to cancel/reject any or all bids without assigning any reason thereof.

ELIGIBILITY CRITERIA:

a) The bidder must be an authorised Manufacturer/dealer/supplier. Registration certificate is to be enclosed.

b) The bidder should have GST registration, copy of self-attested GST Registration certificate to be submitted along with bid.

c) The bidder must submit a list of firms/Government departments/ Ministries/ institutions of repute for which they have supplied similar items earlier. This should be supported by order copy for which the support was executed.

d) Annual Turnover* should be Rs. 50,00,000/- or more.

e) Income tax return document is to be submitted.

f) Preference will be given to the parties having following documents/facilities –

   i. Registered with NSIC (National Small Industries Corporation)
   ii. Green Guard Certificates
   iii. ISO 9001, 2015
   iv. Manufacturing plant within Greater Guwahati
   v. Having experience to supply office furniture in Reputed Educational Institutions

SUBMISSION OF OFFER:

1. The Quotation MUST BE ENCLOSED IN A SEALED COVER super scribing Tender Number / due date & should reach the undersigned on or before due date mentioned in the tender notice. If the quotation cover is not sealed, it will be rejected.

2. Before the deadline for submission of the bid, the Institute reserves the right to modify the bidding document and to extend or not to extend the date of submission. Such amendment/modification will be notified to bidders receiving the bidding document in writing or by cable/fax/ email and will also be hosted on the Institute website.

3. Conditional Tenders will be summarily rejected.

4. A bidder may withdraw, substitute, or modify its bid after it has been submitted by sending a written notice signed by the authorized signatory before the date of submission of the bid. Any re-submission or modification in the bid should be submitted before the date & time of submission of bid as originally conveyed in the invitation of bid.

5. No bid may be withdrawn, substituted or modified in the interval between the deadline for submission of bids and the expiration of the period of bid validity specified by the Bidder on the Bid Form or any extension thereof.

7. **PRICE BID MUST BE SUBMITTED IN ENCLOSED PRICE BID FORMAT ONLY (at Annexure VIII).**

8. Tender should be submitted in the Tender Box in the office of the Purchase Section. No tender is to be handed over to our staff personally unless otherwise specified. All communications are to be addressed to the undersigned only. In case due date happens to be holiday the tender will be accepted and opened on the next working day.

9. Quoting of Price (s):
   Price quoted should be in Indian Currency, free delivery at University Campus at site (for Indigenous products only)

10. **Quantity**: The quantity shown in the tender can be increased or decreased to any extent depending upon the actual requirement.

11. **Other Govt. Taxes:** GST/Other Govt. Taxes: GST, other taxes, levies, etc., are to be indicated separately. BIDDER should mention the GST Registration. PAN Number are to be necessarily indicated in the offer.

12. **Delivery**: The successful BIDDER should deliver the material as per tender document/purchase order. The successful bidder should emboss stickers of Purchase Order number on the material. The BIDDER shall indicate the best and shortest possible delivery period for the supply of the complete machines/equipment from the date of placement of order. A bar chart indicating various activities from the placement of order to commissioning of the machine shall be furnished.

13. Indian Agent should submit the certificate from the Foreign Principal that they are the Authorized & Registered Indian Agent. Otherwise submit dealership certificate of the offered product.

14. Optional items, if any, should be quoted in separate sheet otherwise your quote will be rejected.

EARNEST MONEY DEPOSIT (EMD):

1. *After completion of Selection procedure, the BIDDER shall deposit 2.5 % of the total bid amount as Earnest Money, to the Institute* through the following instruments:
   (i) A crossed Bank Draft in favour of "Registrar, KKHSOU Payable at Guwahati" shall be submitted separate sealed envelope along with the quotation.

   or

   (ii) A confirmed Bank Guarantee by an Indian Nationalized Bank, promising payment of the guaranteed sum to the BUYER on demand within three working days without any demur whatsoever and without seeking any reasons whatsoever. The demand for payment by the University shall be treated as conclusive proof of payment.

2. The Earnest Money shall be valid up to a period of 180 days or the complete conclusion of the contractual obligations to the complete satisfaction of both the BIDDER and the BUYER, including warranty period, whichever is later.

3. No interest shall be payable by the BUYER to the BIDDER on Earnest Money for the period of its currency.

4. In case of successful BIDDER, EMD will be returned within 30 days from the date of submission of Security deposit.

5. SSI/NSIC units are exempted for submitting EMD as per GOI order. Such firms are requested to submit the cost of tender which shall not be considered for exemption. SSI/ NSIC registration certificate in support of the claim to be attached to the bid mandatorily, failing which offer shall be rejected.

6. EMD of a Tender will be forfeited, if the bidder withdraws or amends or modified in tender or impairs or derogates from the tender in any respect within the period of validity of its tender. Further, if the successful bidder fails to furnish the required Security Deposit within the specified period and does not comply to PO terms and fails to deliver the stores, its EMD will be forfeited.

SUPPLEMENTARY /MODIFIED OFFER: Tender submitted against Notice Inviting Tender shall not be returned in case the tender opening date is extended/postponed. BIDDER desirous to modify their offer/terms may submit their revised/ supplementary offer(s) within the extended Tender Opening Date (TOD) by clearly stating to the extent of updating done to the original offer. The Institute reserves the right to open the original offer along with the revised offer.

CANCELLATION OF TENDER: Not withstanding anything specified in this tender document, University in its sole discretion, unconditionally and without assigning any reasons, reserves the rights:

a) To accept OR reject lowest tender or any other tender or all the tenders.
b) To accept any tender in full or in part.
c) To reject the tender, offer not confirming to the tender terms.
d) To give purchase preference to Public Sector Undertakings whenever applicable as per Govt. Policy/ Guidelines.

TERMS OF PAYMENT:

(i)

(a) Payment within 30 days from the date of delivery and Acceptance Certificate of concerned Department / Section / Stores & Purchase Section.

(b) Payment shall be made by electronic fund transfer offered by the Bank.

(c) Octroi Charges/Entry Tax: The Institute will issue form 402 (E-Way Bill) on request basis on submission of Tax Invoice.

(ii) **Security Deposit (SD):** Security Deposit shall be furnished in the form of Demand Draft (DD) or Bank Guarantee (BG) from a Scheduled Commercial Bank operating in India. In case of SD, it should be in the prescribed format as per Annexure-V in favour of **Registrar, KKHSOU Guwahati,** to be submitted along with order acknowledgement. The SD should be valid for a period of 60 days beyond the date of completion of installation, commissioning and all contractual obligation of the supplier including the free warrantee period. Alternatively, 10% of the bill value will be retained against Security Deposit and will be released after the period stated above.

(iv) **Liquidated Damages (L.D)**: (a) If a firm fail to execute the order in time as per the terms and conditions stipulated therein, it will be open to this Institute to recover liquidated damages for delay in delivery and Installation from the firm at the rate 0.5% of the value of the stores per week subject to a maximum of 10% of the total order value. The L.D charges can be increased in case of gross violation of the Purchase Order terms as decided by the Vice Chancellor of the University.

(b)It will also be open to this University alternatively, to arrange procurement of the required stores from any other source at the risk and expense of the firm, which accepted the order but failed to execute the order according to stipulated agreed upon.

VALIDITY OF THE OFFER: *180 Days* from the date of submission of offer.

EVALUATION OF OFFER:

1. The selection shall be through a two-part bid-

(a) General/Technical bid and

(b) Financial bid

2. At the first stage, the qualification for General/Technical conditions shall be considered by opening the responses/bids for the General/Technical criterion (which shall be in a separate and clearly marked envelope). A team of University officials will visit the manufacturing plants/ show rooms of technically qualified parties to get first-hand information about the quality of the products and production/ supply capacity of the manufacturing plant/ show room. Parties not meeting the General/Technical conditions or unsatisfactory report received from visiting team shall not be considered and their financial bid will be returned unopened.

3. Financial bid (which shall be in a separate and clearly marked envelope) shall be opened and evaluated only for firms/agencies found eligible under Technical bid that submit the Tender Form within the stipulated date/time and visiting team report. The

University will evaluate technical and commercial acceptable offers on landed net price basis.

4. Offer which deviates from the vital conditions (as illustrates below) of the tender shall be rejected:

a. Non submission of complete offers.
b. Receipt of offers after due date and time and or by email / fax (unless specified otherwise).
c. Receipt of offers in open conditions.

5. In case any BIDDER is silent on any clauses mentioned in this tender document, The University shall construe that the BIDDER had accepted the clauses as per the invitation to tender.

6. No revision in the terms and conditions quoted in the offer will be entertained after the last date and time fixed for receipt of tenders.

7. The Buyer shall correct arithmetical errors on the following basis:

(i) If there is a discrepancy between the unit price and the line item total that is obtained by multiplying the unit price by the quantity, the unit price shall prevail and the line item total shall be corrected, unless in the opinion of the Buyer there is an obvious misplacement of the decimal point in the unit price, in which case the line item total as quoted shall govern and the unit price shall be corrected.

(ii) If there is an error in a total corresponding to the addition or subtraction of subtotals, the subtotals shall prevail and the total shall be corrected; and

(iii) If there is a discrepancy between words & figures, the amount in words shall prevail, unless the amount expressed in words is related to an arithmetic error, in which case the amount in figures shall prevail subject to (i) and (ii) above.

6. Where the price quoted on FOB/FCA and CIF/CIP basis are the same, the contract would be made on CIF/CIP basis only.

7. The University reserves the right at the time of contract award to increase or decrease the quantity of goods and services originally specified in the tender document without any change in unit price or other terms and conditions. Further, at the discretion of the University, the quantities in the contract may be enhanced by 30% within the delivery period.

8. **REASONABILITY OF PRICES:**

a) **The quoting party should give a certificate to the effect that** the quoted prices are the minimum and they have not quoted the same item on lesser rates than those being offered to the Institute to any other customer nor they will do so till the validity of offer or execution of the purchase order, whichever is later.

b) Copies of **at least last three supply orders of the last 3 years** received from other customers along with details of such supply orders preferably in Govt. organization for the same item/model **must be submitted with the offer if they have any,** giving reasons of price difference of their supply order & those quoted to us, if any. Non-submission of such Purchase Order copies may lead to rejection of their bid.

c) The party must give details of identical or similar equipment, if any, supplied to any University during last three years along with the final price paid and Performance Certificate from them.

d) A client list along with the satisfactory installation certificate of similar equipment supplied to Govt./ Semi govt./ reputed private Institute must be submitted, without which their offer may not be considered for evaluation and rejected.

SPECIFICATION AND SAMPLE

The suppliers shall supply the items in accordance with the specifications/ descriptions given in the acceptance of tender. **The Buyer reserved the rights to alter the description of items given in the acceptance of tender**. In the event any such alteration results in any implication to the deliver and price, such implication shall be mutually agreed between the Buyer and Supplier. In case certified sample has been issued by the Buyer and the specifications also exist in the acceptance of tender then the certified sample will govern the supply.

TRANSFER AND SUBLETTING: The seller shall not sublet, transfer, assign or otherwise part with the acceptance to the tender or any part thereof, either directly or indirectly, without the prior written permission of the Buyer.

FORCE MAJEURE: Force Majeure will be accepted on adequate proof thereof.

PACKING: The suppliers shall be responsible for the material being properly packed for the transport by Road/Air/Sea (as the case may be) so as to ensure there being free from lost or damage or arrival at destinations.

INSTALLATION: The Bidder should install the furniture's without any additional cost.

LEGAL MATTER: All Domestic and International disputes are subject to Guwahati Jurisdiction Only.

Registrar
KKHSOU

Annexure III

(To be printed on Supplier's letterhead)

INTEGRITY PACT

General

This pre-bid pre-contract Agreement hereinafter called the Integrity Pact is made on ..... day of the month of ..... , between, on one hand, the Registrar, KKHSOU Guwahati hereinafter called the "BUYER" of the first part and M/s.....represented by Shri .....,Director/Chief Executive Officer/ General Manager hereinafter called the "BIDDER/Seller" of the second part.

WHEREAS the BUYER proposes to procure .....(Name of the Stores/Equipment/Item) and the BIDDER/Seller is willing to offer/has offered the stores and WHEREAS the BIDDER is a private company/public company/Government undertaking/partnership/registered export agency, constituted in accordance with the relevant law in the matter and the BUYER is a Autonomous Body/Department of the Government of Assam performing its functions in Assam.

NOW, THEREFORE, to avoid all forms of corruption by following a system that is fair, transparent and free from any influence/prejudiced dealings prior to, during and subsequent to the currency of the contract to be entered into with a view to enabling the BUYER to obtain the desired said stores / equipment at a competitive price in conformity with the defined specifications by avoiding the high cost and the distortionary impact of corruption on public procurement, and Enabling BIDDERs to abstain from bribing or indulging in any corrupt practice in order to secure the contract by providing assurance to them that their competitors will also abstain from bribing and other corrupt practices and the BUYER will commit to prevent corruption, in any form, by its officials by following transparent procedures.

The parties hereto hereby agree to enter into this Integrity Pact and agree as follows:

Commitments of the BUYER

1.1 The BUYER undertakes that no official of the BUYER, connected directly or indirectly with the contract, will demand, take a promise for or accept, directly or through intermediaries, any bribe, consideration, gift, reward, favour or any material or immaterial benefit or any other advantage from the BIDDER, either for themselves or for any person, organization or third party related to the contract in exchange for an advantage in the bidding process, bid evaluation, contracting or implementation process related to the Contract.

1.2 The BUYER will, during the pre-contract stage, treat all BIDDERs alike, and will provide to all BIDDERs the same information and will not provide any such information to any particular BIDDER which could afford an advantage to that particular BIDDER in comparison to other BIDDERs.

1.3 All the officials of the Buyer will report to the appropriate Government office any attempted or completed breaches of the above commitments as well as any substantial suspicion of such a breach.

2. In case any such preceding misconduct on the part of such official (s) is reported by the BIDDER to the BUYER, with full and verifiable facts and the same is prima facie found to be correct by the BUYER, necessary disciplinary proceedings, or any other action as deemed fit, including criminal proceedings may be initiated by the BUYER and such a person shall be debarred from further dealings related to the contract process. In such a case while an enquiry is being conducted by the BUYER the proceedings under the contract would not be stalled.

Commitments of BIDDERs :

3. The BIDDER commits itself to take all measures necessary to prevent corrupt practices, unfair means and illegal activities during any stage of its bid or during any pre-contract or post-contract stage in order to secure the contract or in furtherance to secure it and in particular commit itself to the following:

3.1 The BIDDER will not offer, directly or through intermediaries, any bribe, consideration, gift, reward, favour, any material or immaterial benefit or other advantage, commission, fees, brokerage or inducement to any official of the BUYER, connected directly or indirectly with the bidding process, or to any person, organization or third party related to the contract in exchange for any advantage in the bidding, evaluation, contracting and implementation of the Contract.

3.2 The BIDDER further undertakes that it has not given, offered or promised to give, directly or indirectly any bribe, gift, consideration, reward, favour, any material or immaterial benefit or other advantage, commission, fees, brokerage or inducement to any official of the BUYER or otherwise in procuring the Contract or forbearing to do or having done any act in relation to the obtaining or execution of the Contract or any other Contract with the Government for showing or forbearing to show favour or disfavour to any person in relation to the Contract or any other Contract with the Government.

3.3 BIDDERs shall disclose the name and address of agents and representatives and Indian BIDDERs shall disclose their foreign principals or associates.

3.4 BIDDERs shall disclose the payments to be made by them to agents / brokers or any other intermediary, in connection with this bid/contract.

3.5 The BIDDER further confirms and declares to the BUYER that the BIDDER is the original manufacturer/ integrator/ authorized government sponsored export entity of the defiance stores and has not engaged any individual or firm or company whether Indian or foreign to intercede, facilitate or in any way to recommend to the BUYER, or any of its functionaries, whether officially or unofficially to the award of the contract to the BIDDER, nor has any amount been paid, promised or intended to be paid to any such individual, firm or company in respect of any such intercession, facilitation or recommendation.

3.6 The BIDDER, either while presenting the bid or during pre-contract negotiations or before signing the contract, shall disclose any payments he has made, is committed to or intends to make to officials of the BUYER or their family members, agents, brokers or

any other intermediaries in connection with the contract and the details of services agreed upon for such payments.

3.7 The BIDDER will not collude with other parties interested in the contract to impair the transparency, fairness and progress of the bidding process, bid evaluation, contracting and implementation of the contract.

3.8 The BIDDER will not accept any advantage in exchange for any corrupt practice, unfair means and illegal activities.

3.9 The BIDDER shall not use improperly, for purposes of competition or personal gain, or pass on to others, any information provided by the BUYER as part of the business relationship, regarding plans, technical proposals and business details, including information contained in any electronic data carrier. The BIDDER also undertakes to exercise due and adequate care lest any such information is divulged.

3.10 The BIDDER commits to refrain from giving any complaint directly or through any other manner without supporting it with full and verifiable facts.

3.11 The BIDDER shall not instigate or cause to instigate any third person to commit any of the actions mentioned above.

3.12 If the BIDDER or any employee of the BIDDER or any person acting on behalf of the BIDDER, either directly or indirectly, is a relative of any of the officers of the BUYER, or alternatively, if any relative of an officer of the BUYER has financial interest/stake in the BIDDER's firm, the same shall be disclosed by the BIDDER at the time of filing of tender. The term relative for this purpose would be as defined in Section 6 of the Companies Act 1956.

3.13 The BIDDER shall not lend to or borrow any money from or enter into any monetary dealings or transactions, directly or indirectly, with any employee of the BUYER.

4. **Previous Transgression**

4.1 The BIDDER declares that no previous transgression occurred in the last three years immediately before signing of this Integrity Pact, with any other company in any country in respect of any corrupt practices envisaged hereunder or with any Public Sector Enterprise in India or any Government Department in India, that could justify BIDDER's exclusion from the tender process.

4.2 The BIDDER agrees that if it makes incorrect statement on this subject, BIDDER can be disqualified from the tender process or the contract, if already awarded, can be terminated for such reason.

5. **Earnest Money Deposit**

5.1 The BIDDER shall deposit an amount as Earnest Money after selection with the Institute through the following instruments:

a. A confirmed Bank Guarantee by an Indian Nationalized Bank, promising payment of the guaranteed sum to the BUYER on demand within three working days without any demur whatsoever and without seeking any reasons whatsoever. The demand for payment by the Institute shall be treated as conclusive proof of payment.

5.2 The Earnest Money shall be valid up to a period of 180 days or the complete conclusion of the contractual obligations to the complete satisfaction of both the BIDDER and the BUYER, including warranty period, whichever is later.

5.3 No interest shall be payable by the BUYER to the BIDDER on Earnest Money for the period of its currency.

5.4 In case of successful BIDDER, EMD will be returned within 30 days from the date of submission of Performance Bank Guarantee/Security Deposit.

6. **SECURITY DEPOSIT /PERFORMANCE GUARANTEE**:

6.1 Security Deposit/Performance Bank Guarantee is mandatory.

6.2 Successful tenderer/ bidder should submit performance guarantee as prescribed above to be received in the office of Dy. Registrar, Stores & Purchase Section on or before 30 days from the date of issue of order acknowledgement. The performance bank guarantee to be furnished in the form of Bank Guarantee as per Annexure-V of the tender documents, for an amount covering 10% of the purchase order value.

6.3 The Performance Bank Guarantee should be established in favour of **"Registrar, KKHSOU**" through any Bank situated at Guwahati or outstation with a clause to enforced the same on their local branch at Guwahati

6.4 Performance Bank Guarantee shall be for the due and faithfully performance of the contract and shall remain binding, notwithstanding such variations, alterations for extensions of time as may be made, given, conceded or agreed to between the successful tenderer and the buyer under the terms and conditions of acceptance to tender.

6.5 The successful tenderer is entirely responsible for due performance of the contract in all respects according to the speed, intent and meaning of the terms and conditions and specification and all other documents referred to in the acceptance of tender.

6.6 Bank guarantee against Security Deposit shall be kept valid during the period of contract and shall continue to be enforceable for a period of two years from the date of order acknowledgement.

7. **Sanctions for Violations**

7.1 Any breach of the aforesaid provisions by the BIDDER or any one employed by it or acting on its behalf (whether with or without the knowledge of the BIDDER) shall entitle the BUYER to take all or any one of the following actions, wherever required:

(i) To immediately call off the pre-contract negotiations without assigning any reason or giving any compensation to the BIDDER. However, the proceedings with the other BIDDER(s) would continue.

(ii) The Earnest Money Deposit (in pre-contract stage) and/or Security Deposit/Performance Bank Guarantee (after the contract is signed) shall stand

forfeited either fully or partially, as decided by the BUYER and the BUYER shall not be required to assign any reason therefore.

iii) To immediately cancel the contract, if already signed without giving any compensation to the BIDDER.

(iv) To recover all sums already paid by the BUYER, and in case of an Indian BIDDER with interest thereon at 2% higher than the prevailing Prime Lending Rate of State Bank of India, while in case of a BIDDER from a country other than India with interest thereon at 2% higher than the LIBOR. If any outstanding payment is due to the BIDDER from the BUYER in connection with any other contract for any other stores, such outstanding payment could also be utilized to recover the aforesaid sum and interest.

(v) To encase the advance bank guarantee and performance guarantee/warranty bond, if furnished by the BIDDER, in order to recover the payments, already made by the BUYER, along with interest.

(vi) To cancel all or any other contracts with the BIDDER. The BIDDER shall be liable to pay compensation for any loss or damage to the BUYER resulting from such cancellation/rescission and the BUYER shall be entitled to deduct the amount so payable from the money(s) due to the BIDDER.

(vii) To debar the BIDDER from participating in future bidding processes of the Government of India for a minimum period of two years, which may be further extended at the discretion of the BUYER.

(viii) To recover all sums paid in violation of this pact by the BIDDER(s) to any middleman or agent or broker with a view to securing the contract.

(ix) In cases where irrevocable Letters of Credit have been received in respect of any contract signed by the BUYER with the BIDDER, the same shall not be opened.

(x) Forfeiture of Performance Bank Guarantee in case of a decision by the BUYER to forfeit the same without assigning any reason for imposing sanction for violation of this Pact.

7.2 The BUYER will be entitled to take all or any of the actions mentioned at para 7.1(i) to (x) of this Pact also on the Commission by the BIDDER or any one employed by it or acting on its behalf (whether with or without the knowledge of the BIDDER), of an offence as defined in Chapter IX of the Indian Penal code, 1860 or Prevention of Corruption Act, 1988 or any other statute enacted for prevention of corruption.

7.3 The decision of the BUYER to the effect that a breach of the provisions of this pact has been committed by the BIDDER shall be final and conclusive on the BIDDER. However, the BIDDER can approach the independent monitor(s) appointed for the purposes of this pact.

8. **Fall Clause**

The BIDDER undertakes that it has not supplied/is not supplying similar product/systems or subsystems at a price lower than that offered in the present bid in respect of any other Ministry/ Department of the Government of India or PSU and if it is found at any stage that similar product/system or subsystem was supplied by the BIDDER to any other Ministry/Department of the Government of India or PSU at a lower price, then that very price, with due allowance for elapsed time, will be applicable to the present case and the difference in the cost would be refunded by the BIDDER to the BUYER, if the contract has already been concluded.

9. **Independent monitors**

9.1 The BUYER has appointed Independent Monitors (hereinafter referred to as Monitors) for this pact.

9.2 The task of the Monitor shall be to review independently and objectively, whether and to what extent the parties comply with the obligations under this pact.

9.3 The Monitor shall not be subject to instructions by the representatives of the parties and performs their functions neutrally and independently.

9.4 Both the parties accept that the Monitor have the right to access all the documents relating to the project/procurement, including minutes of the meetings.

9.5 As soon as the Monitor notices, or believes to notice, a violation of this pact, he will so inform the Authority designated by the BUYER.

9.6 The BIDDER(s) accepts that the Monitor has the right to access without restriction to all project documentation of the BUYER including that provided by the BIDDER. The BIDDER will also grant the Monitor, upon his request and demonstration of a valid interest, unrestricted and unconditional access to his project documentation. The same is applicable to subcontractors. The Monitor shall be under contractual obligation to treat the information and documents of the BIDDER/Subcontractor(s) with confidentiality.

9.7 The BUYER will provide to the Monitor sufficient information about all meetings among the parties related to the project provided such meetings could have an impact on the contractual relations between the parties. The parties will offer to the Monitor the option to participate in such meetings.

9.8 The Monitor will submit a written report to the designated Authority of BUYER/ Secretary in the Department within 8 to 10 weeks from the date of reference or intimation to him by the BUYER / BIDDER and, should the occasion arise, submit proposals for correcting problematic situations.

10. **Facilitation of Investigation**

In case of any allegation of violation of any provisions of this pact or payment of commission, the BUYER or its agencies shall be entitled to examine all the documents including the Books of Accounts of the BIDDER and the BIDDER shall provide necessary information & documents in English and shall extend all possible help for the purpose of such examination.

11. **Law and Place of Jurisdiction**

This Pact is subject to Indian Law. The place of performance and Jurisdiction is the Seat of the BUYER.

12. **Other Legal Actions**

The actions stipulated in this Integrity Pact are without prejudice to any other legal action that may follow in accordance with the provisions of the extant law in force relating to any civil or criminal proceedings.

13. **Validity**

13.1 The validity of this Integrity Pact shall be from date of its signing and extend upto 5 years or the complete execution of the contract to the satisfaction of both the BUYER and the BIDDER/ Seller, including warranty period, whichever is later. In case BIDDER is unsuccessful, this Integrity Pact shall expire after six months from the date of the signing of the contract.

13.2 Should one or several provisions of this pact turn out to be invalid, the remainder of this pact remains valid. In this case, the parties will strive to come to an agreement to their original intentions.

14. The parties hereby sign this Integrity Pact.

BUYER Registrar, KKHSOU seal Date & Place	BIDDER Signature with Date & Place
Witness	Witness
1. _____	1. _____
2. _____	2. _____

Annexure IV

FORMAT FOR EARNEST MONEY DEPOSIT / BID SECURITY

(To be typed on Non-judicial stamp paper of the value of Indian Currency of One Hundred)

(TO BE ESTABLISHED THROUGH ANY OF THE NATIONALED BANKS (WHETHER SITUATED AT GUWAHATI OR OUTSTATION) WITH A CLAUSE TO ENFORCE THE SAME ON THEIR LOCAL BRANCH AT GUWAHATI OR ANY SCHEDULED BANK (OTHER THAN NATIONALISED BANK) SITUATED AT GUWAHATI. BONDS ISSUED BY CO-OPERATIVE BANKS ARE NOT ACCEPTED)

LETTER OF GUARANTEE

To,
Registrar,
KKHSOU
Resham Nagar, Khanapara, Guwahati - 781022

IN ACCORDANCE WITH YOUR TENDER for supply of ……, M/S …… (hereinafter called the "Bidder") having its Registered Office at …….. wish to participate in the said bid for the supply ……. as an irrevocable Bank Guarantee agaist Earnest Money Deposit for an amount of Rs. …….. (Rupees ……) valid upto …… (180 days from the date of issue of Bank Guarantee), is required to be submitted by the bidder as a condition precedent for participating in the said bid, which amount is liable to be forfeited by the Buyer on (1) the withdrawal or revision of the offer by the bidder within the validity period, (2) Non acceptance of the Letter of Indent / Purchase order by the Bidder when issued within the validity period, (3) failure to execute the contract as per contractual terms and condition with in the contractual delivery period and (4) on the happening of any contingencies mentioned in the bid documents.

During the validity of this Bank Guarantee:

We, ... (Bank name) having its Registered Office at ..... guarantee and undertake to pay immediately on first demand by ..... the amount of Rs ..... (Rupees .....) without any reservation, protest, demur and recourse. Any such demand made by the University shall be conclusive and recourse. Any such demand made by the buyer shall be binding on the Bank irrespective of any dispute or difference raised by the Bidder.

The Guarantee shall be irrevocable and shall remain valid up to ..... (180 days from the date of issue of Bank Guarantee) If any further extension is required, the same shall be extended to such required period on receiving instruction form the Bidder, on whose behalf the is Guarantee is issued.

Notwithstanding anything contained herein

i. Our liability under this Bank Guarantee shall not exceed Rs..... (Rupees.....) .

ii. This Bank Guarantee shall be valid up to .....(date).

iii. We are liable to pay the guaranteed amount or any part thereof under this Bank Guarantee only and only if you serve upon us a written claim or before ..... (date).

This Bank further agrees that the claims if any, against this Bank Guarantee shall be enforceable at our branch office at .....situated at ..... (Address of local branch).

Yours truly,

Signature and seal of the guarantor:
Name of Bank:
Address:
Date:

Instruction to Bank: Bank should note that on expiry of Guarantee Period, the Original Guarantee will not be returned to the Bank. Bank is requested to take appropriate necessary action on or after expiry of guarantee period.

Annexure V

FORMAT FOR PERFORMANCE BANK GUARANTEE

(To be typed on Non-judicial stamp paper of the value of Indian Rupees of One Hundred)

(TO BE ESTABLISHED THROUGH ANY OF THE NATIONAL BANKS (WHETHER SITUATED AT GUWAHATI OR OUTSTATION) WITH A CLAUSE TO ENFORCE THE SAME ON THEIR LOCAL BRANCH AT GUWAHATI OR ANY SCHEDULED BANK (OTHER THAN NATIONALISED BANK) SITUATED AT GUWAHATI. BONDS ISSUED BY CO-OPERATIVE BANKS ARE NOT ACCEPTED.)

To,
Registrar,
KKHSOU
Resham Nagar, Khanapara, Guwahati - 781022

LETTER OF GUARANTEE

WHEREAS Krishna Kanta Handiqui State Open University, Guwahati (Buyer) have invited Tenders vide Tender No..... Dt. .....for purchase of ..... AND WHEREAS the said tender document requires that any eligible successful tenderer (seller) wishing to supply the equipment /machinery etc. in response thereto shall establish an irrevocable Performance Guarantee Bond in favour of **"Registrar, Krishna Kanta Handiqui State Open University, Guwahati"** in the form of Bank Guarantee for Rs ..... and valid till **two years** from the date of issue of Performance Bank Guarantee may be submitted within 30 (Thirty) days from the date of acceptance as a successful bidder.

NOW THIS BANK HEREBY GUARANTEES that in the event of the said tenderer (seller) failing to abide by any of the conditions referred in tender document / purchase order / performance of the equipment / machinery, etc. this bank shall pay to Krishna Kanta Handiqui State Open University, Guwahati on demand and without protest or demur Rs ..... (Rupees.....).

This bank further agrees that the decision of Krishna Kanta Handiqui State Open University, Guwahati (Buyer) as to whether the said Tenderer (Seller) has committed a breach of any of the conditions referred in tender document / purchase order shall be final and binding.

We, ... (name of the bank & branch) hereby further agree that the guarantee herein contained shall not be affected by any change in the constitution of the Tenderer (Seller) and/ or Krishna Kanta Handiqui State Open University, Guwahati (Buyer).

Notwithstanding anything contained herein:

1. Our liability under this Bank Guarantee shall not exceed Rs. ..... (Indian Rupees ..... only).

2. This Bank Guarantee shall be valid up to .....(date) and

3. We are liable to pay the guaranteed amount or any part thereof under this bank guarantee only and only if University serve upon us a written claim or demand on or before .....(date).

This Bank further agrees that the claims if any, against this Bank Guarantee shall be enforceable at our branch office at ..... situated at ..... (Address of local branch).

Yours truly,
Signature and seal of the guarantor:
Name of Bank:
Address:
Date:

Instruction to Bank: Bank should note that on expiry of Guarantee Period, the Original Guarantee will not be returned to the Bank. Bank is requested to take appropriate necessary action on or after expiry of bond period.

Annexure VI

PREVIOUS SUPPLY ORDERS FORMAT

Name of the Firm**:**

Order placed by {*Full address of Buyer]*	Order No. and Date	Description And quantity of Ordered Equipment	Value of order	Date of completion of delivery as per contract	Date of actual completion of delivery	Remarks indicating reasons for late delivery, if any and jurisdiction for price difference of their supply order & those quoted to us.	Has the equipment been installed satisfactorily? (*Attach a certificate from the Buyer/ Consigner]*	Contact person along with telephone No. , Fax No., E mail address

Signature and Seal of the Manufacturer/ bidder ……

Place:

Date:

Annexure VII

TECHNICAL BID (All the information is to be supported by necessary documents as indicated in the previous pages)

General Information

1. Name of the Bidder
2. Full Address of the Bidder with Pin Code, Telephone number, Fax number, e-mail address
3. Local Address of the Bidder, (if any) with Pin Code, Telephone number, Fax number, E-mail address
4. Registration with concerned Government bodies
5. Company Registration (in case of Private Limited or Limited company)
6. Registered deed of partnership (in case of partnership)
7. Trade License
8. GST Certificate
9. PAN Card
10. Annual Turn Over in last 3 years (should not be less than Rs.50,00,000/- per year)
11. Supporting documents for experience of minimum 5 years.
12. NSIC (National Small Industries Corporation) Certificate
13. Green Guard Certificate
14. ISO 9001, 2015 Certificate

Annexure-VIII

Tender Format-1

PRICE BID
(For Indigenous Items)

Tender Reference No.:
Date:

Sl. No.	Name of the Furniture	Technical Specifications and Desirable Features	Quantity	Unit Rate	Amount
1.	**Executive/work desk (with drawers/storage**	**Tops:** Work surface: The Panels are to be made from 18 ± 0.5 mm thk Pre-laminated Boards (E2 GRADE) as per with 2mm thick PVC Edge banding on all sides. **Understructure:** C-Frame : Made from 0.9 ±0.09mm thk powder coated 50microns (±10) CRCA MS Tubular Frame : Sq. 25.4±0.3mm x 1.2±0.096mm Thk MS ERW tube powder coated **Storage:** Shell : 0.6mm Thk CRCA as per IS-513. Drawer Tray & back : 0.5mm Thk CRCA as per IS-513. Drawer Front : 0.6mm Thk CRCA as per IS-513. Lock : Cam Lock Handles : Plastic Handle.	18		
2.	**Ergonomic office chair**	1. SEAT ASSEMBLY: The seat assembly is made up of 1.2 ±0.1cm. thick hot-pressed plywood measured as per QA method described in OCP-QLTA-P14-18, upholstered with fabric upholstery covers and moulded Polyurethane foam. SEAT SIZE : 47.0 cm. (W) x 48.0 cm. (D) 2. BACK ASSEMBLY: The back asembly is made of powder coated (DFT 40-60 microns) tubular frame of Ø 2.54 ±0.03cm. x 0.2 ±0.016cm.thk. MS ERW tube designed with contoured lumbar support for extra comfort. The back is upholstered using Net fabric with high tenacity yarn. FULL BACK SIZE : 46.5 cm. (W) x 60.5cm. (H) 3. HIGH RESILIENCE (HR) POLYURETHANE FOAM: The HR polyurethane foam is moulded with density =45+/-2 kg/m³ and hardness load 16 ± 2 kgf as per IS:7888 for 25% compression. 4. ARMRESTS: The one-piece armrests are injection moulded from black Co-polymer Polypropylene. 5. CENTRE-TILT MECHANISM : The mechanism is designed with the	28		

		following features: · 360° revolving type. · Tilt tension adjustment. · Upright position locking. 6. PNEUMATIC HEIGHT ADJUSTMENT : The pneumatic height adjustment has an adjustment stroke of 11.0 ±0.3cm. 7. PEDESTAL ASSEMBLY : The pedestal is injection moulded in black 33% glass-filled Nylon66 and fitted with 5 nos. twin wheel castors. The pedestal is 66.3 ±0.5cm. pitch-center dia. (76.3 ±1.0cm with castors.) 8. TWIN WHEEL CASTORS : The twin wheel castors are injection moulded in Black Nylon.			
4.	**Almirah (for research materials and other materials)**	Product size : 900 mm(W x 450 mm (D) x 1830 mm (H) Height excluding leveler	13		
		Construction & Material: • Rigid Knock down construction. • Prime Quality CRCA Steel – Panels from 0.6 mm thick (±0.07 mm) & Front frame, shelf 0.8 mm thick (±0.08mm) 1. CRCA 'D' grade as per IS:513			
		Configuration (Door): Full height Steel Hinged Door			
		Locking & handle: • Plastic Recessed Handle cum Cam Lock 3 way locking mechanism with shooting bolt arrangement.			
		Shelving: Height wise Adjustable Shelf Mounting • Uniformity Distributed Load Capacity per each full/half shelf is 40 Kg maximum • 4 Nos. of Adjustable Full Shelves The A4 size Box file (85Wx345Hx285D) can be stored vertically on three shelves and the clear space above fourth shelf is 180mm			
		Leveler: Screw type leveler with Hex. Plastic base (add in unit height min-8mm & additional 5mm max for adjustment.			
		Top: Metal Top only (Add in unit height 1 mm for metal top)			
		Finish: Epoxy Powder coated to the thickness of 50 microns (+/- 10)			

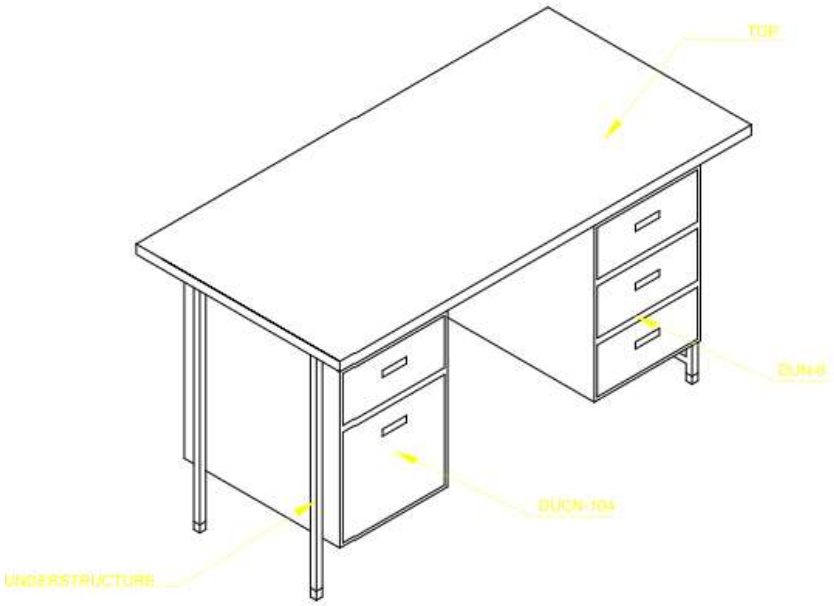

W	D	H
1365	680	750

Figure 1: SL: 01

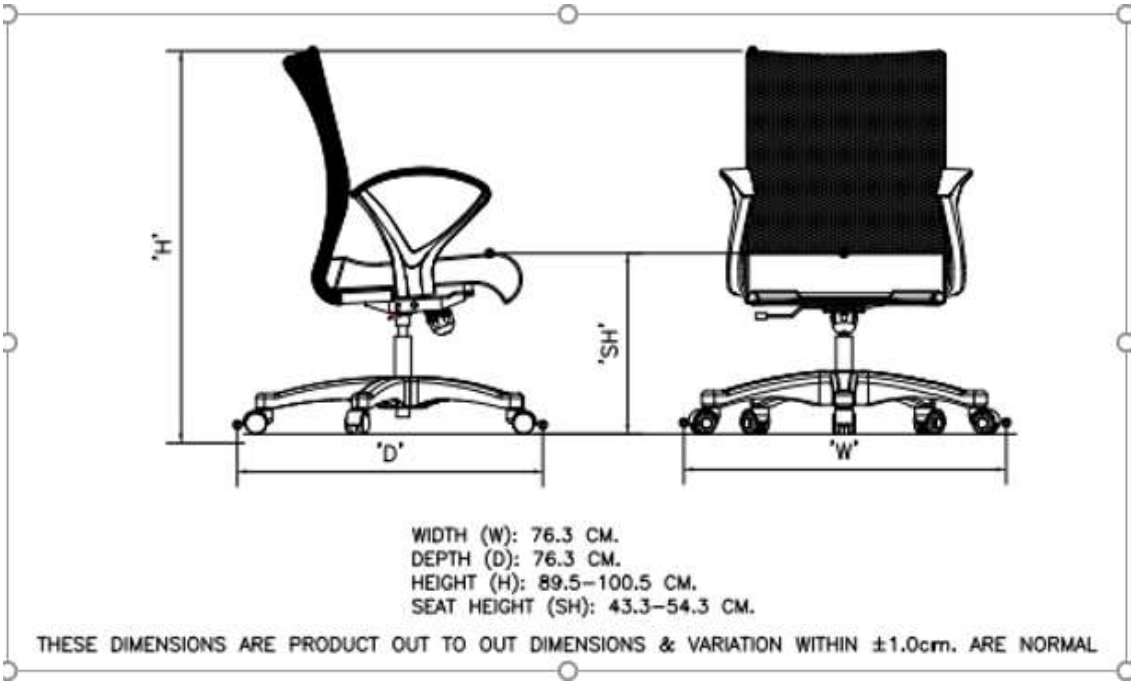

Figure 2: SL-02

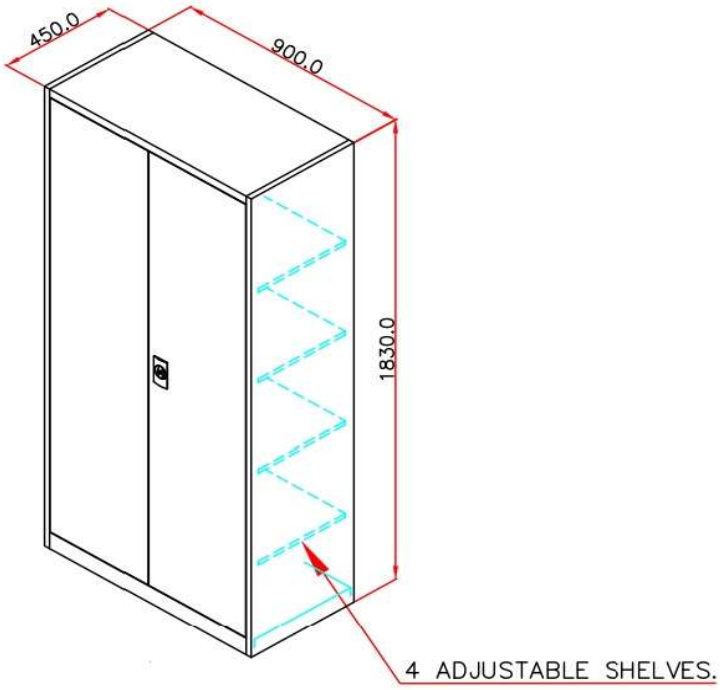

Figure 3: SL - 03

1) Delivery Mode: Free Delivery at KKHSOU site.
2) **Total Bid price should be inclusive of all taxes and levies, transportation, loading, unloading, etc. (Should be shown separately)**
3) Validity Date: Maximum 180 days from the date of opening of technical bid.
4) Payment Term: Payment within 30 days from the date submission of bill / Acceptance Certificate to KKHSOU H.O. / Concerned Department

PAN No.:
GST Registration No.:
Signature:
Name:
Bank Address:
Affix Rubber Stamp:

Place:
Date:

Annexure-IX

MANDATE FORM FOR ELECTRONIC FUND TRANSFER/RTGS TRANSFER

Date: / /

To
The Registrar,
Krishna Kanta Handiqui State Open University
Patgaon, Rani,
Guwahati – 781017

Sub: Authorization for release of payment / dues from Krishna Kanta Handiqui State Open University, Guwahati through Electronic Fund Transfer/RTGS Transfer.

1. Name of the Party/Firm/Company/Institute:

2. Address of the Party:

City_____Pin Code_____
E-Mail ID_____Mob No:_____
Permanent Account Number(PAN)_____

3. Particulars of Bank:

Bank name		Branch Name	
Branch Place		Branch City	
PIN Code		Branch Code	
MICR No.			
(9 digit number appearing on the MICR Bank of the Cheque supplied by the Bank, Please attac a Xerox copy of a cheque of your bank for ensuring accuracy of the bank name, branch nam and code number)			
IFS Code: (11 digit alpha numeric code)			
Account Type	Savings	Current	Cash Credit
Account Number			

DECLARATION

I hereby declare that the particulars given above are correct and complete. If any transaction delayed and not effected for reasons of incomplete or incorrect information I shall not hold Registrar, KKHSOU, Guwahati responsible. I also undertake to advise any change in the particulars of my account to facilitate updating of records for purpose of credit of amount through NEFT/RTGS Transfer.

Place: _____
Date: _____

Signature & Seal of the Authorized Signatory of the Party

Certified that particulars furnished above are correct as per our records
Bankers Stamp:
Date: _____

Signature of the Authorized Official from the Bank

N.B: Please fill in the information in CAPITAL LETTERS, computer typed; please TICK wherever it is applicable